PRODUCT SHEET

Description:
Wall Mounted Door Stop W/Coat Hook, SS304 Black Finish, 66x49x37mm

Item number:
22.23.140-4

Units	Box	Carton	HS Code	Barcode
Pcs.	20	200	8302411000	5704866528931

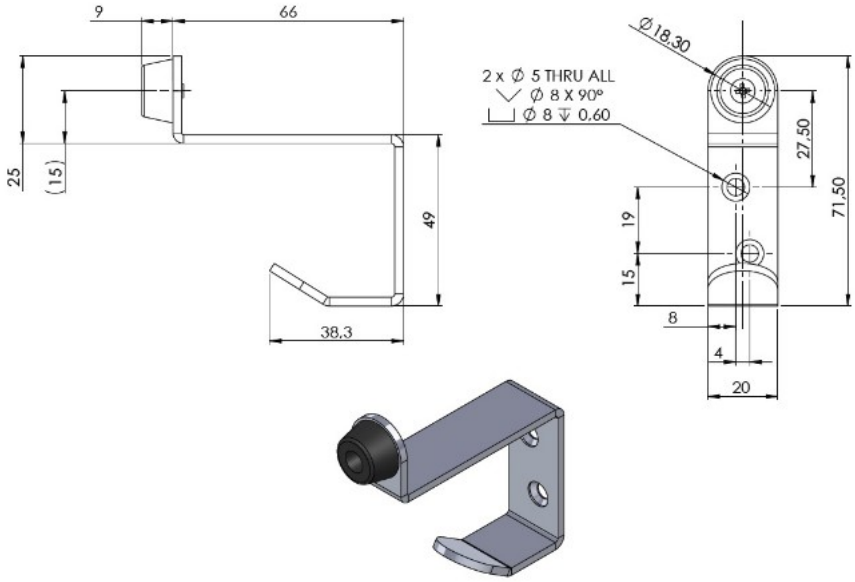

SISO A/S
Mileparken 11
DK-2740 Skovlunde
Denmark
VAT: DK24786013

Phone +45 45 830 900

www.siso.dk
siso@siso.dk

Danske Bank
Nytorv Branch
Copenhagen
SWIFT: DABADKKK

Account no.
4180 3112 112936
IBAN Account
DK7230003112112936